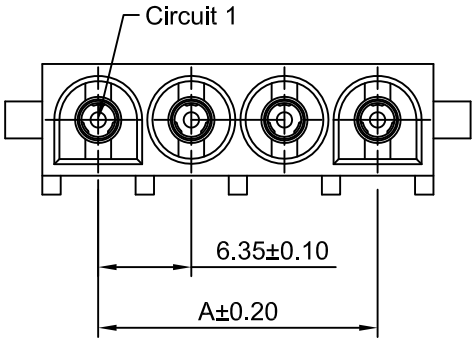

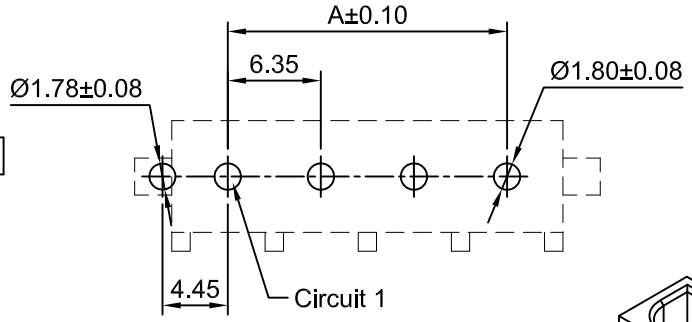

P.C.B LAYOUT
TOLERANCE:±0.05

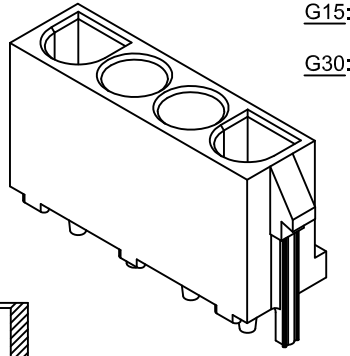

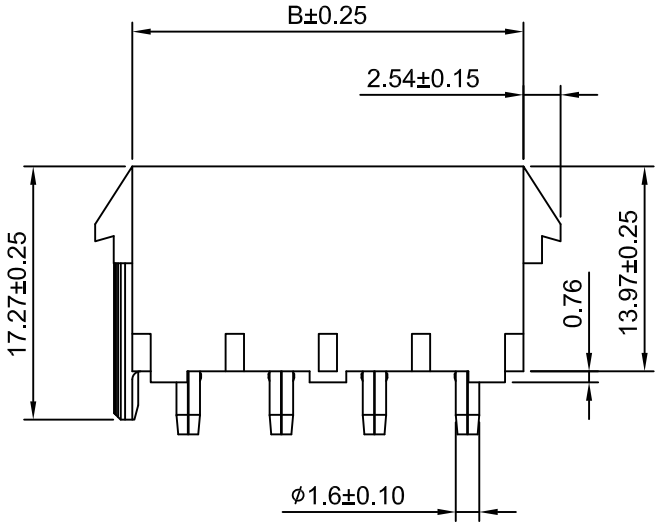

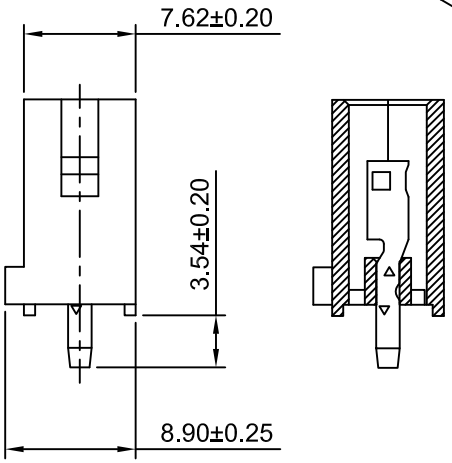

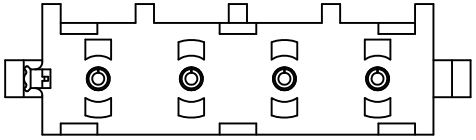

Ordering Information:

C6351WV-F-XP-F - *** - **
1 2 3

1.Part NO.
2.Material:
(blank): Nylon 66,UL94V-2 (Natural)
V0: Nylon 66,UL94V-0 (White)
GWT: Nylon 66,UL94V-0 (Beige),
IEC 60335-1,5th Edition
Glow Wire Capable.
3.Finish:
(blank): Tin over Nickel
G: Gold-flash
G15: 15μin (0.38μm) MIN.Select Gold(Mating Area)
100μin (2.54μm) MIN.Select Tin
G30: 30μin (0.76μm) MIN.Select Gold(Mating Area)
100μin (2.54μm) MIN.Select Tin

SPECIFICATIONS:
Current Rating: 13.5A AC,DC(Max)
Voltage Rating: 600V AC,DC
Temperature Range: -40°C ~ +105°C
Contact Resistance: 3.5mΩ Max
Insulation Resistance: 1000MΩ Min
Withstanding Voltage: 5000V AC/minute
Pin Material: Phosphor Bronze/Tin-plated
Material: Nylon 66,UL94V-0 or UL94V-2

Ordering Information & Dimensions

Part NO.	Dimensions(mm)	
	A	B
C6351WV-F-2P-F	6.35	13.97
C6351WV-F-3P-F	12.70	20.32
C6351WV-F-4P-F	19.05	26.67
C6351WV-F-5P-F	25.40	33.02
C6351WV-F-6P-F	31.75	39.37
C6351WV-F-7P-F	38.10	45.72
C6351WV-F-8P-F	44.45	52.07
C6351WV-F-9P-F	50.80	58.42
C6351WV-F-10P-F	57.15	64.77

REV	DESCRIPTION	DATE
A2	CHANGE THE SIZE	2020.12.19
A1	CHANGE THE DRAWING	2018.12.01
A0	NEW RELEASE	2005.05.10

CJTconn CHANGJIANG CONNECTORS CO.,LTD.

Unit	Scale	Sheet
mm	2:1	1 of 1
DRWN Dengchun Yi	CHK'D Diankui Wan	APPR Jack Yin

General Tolerances
x.x±0.25
x.xx±0.20
x.xxx±0.15
ANGLES ±1°

THIRD ANGLE PROJECTION

TITLE
6.35mm PITCH
180° SINGLE ROW WAFER,
POLARIZING PEG - FEMALE TYPE

DRAWING NO.
C6351WV-F-XP-F

REV
A2