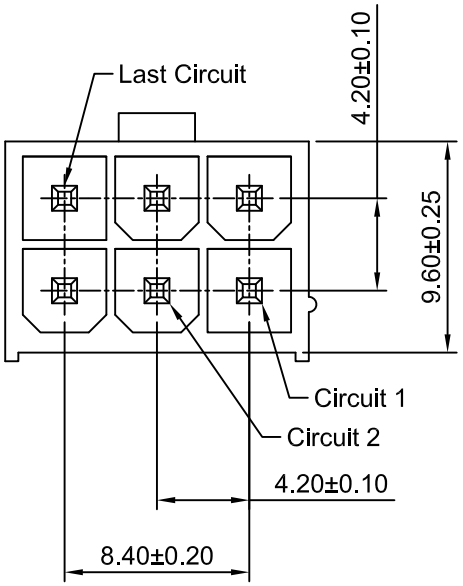

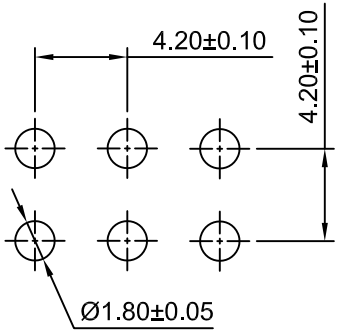

P.C.B LAYOUT

Ordering Information:

C4201WV-2x3P-B - *** - ***
1 2 3

1.Part No.
2.Material:
(blank):Nylon 66,UL94V-2
V0:Nylon 66,UL94V-0
LCP:LCP,UL94V-0
GWT:Nylon 66,UL94V-0,GWT 750°C
3.Color:
(blank):Black
NAT:Natural
WH:White
RD:Red
YL:Yellow
BL:Blue

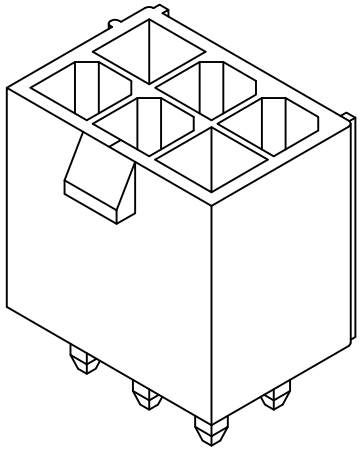

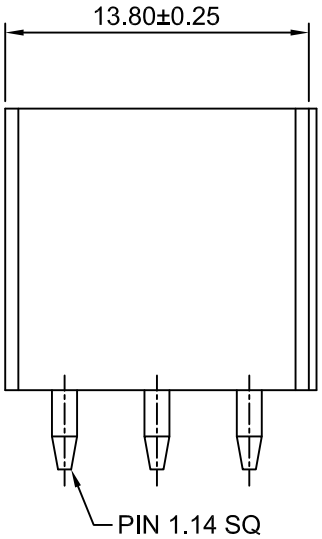

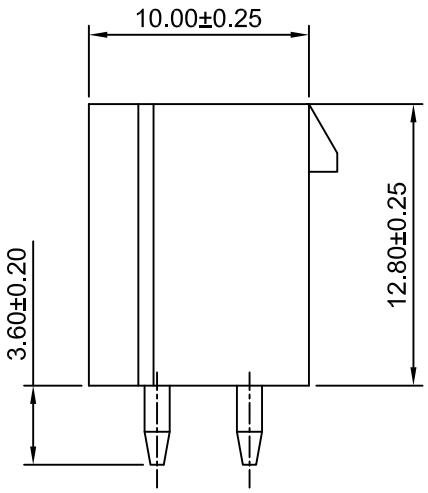

SPECIFICATIONS:
Current Rating: 13A AC,DC
Voltage Rating: 600V AC,DC
Temperature Range: -40°C ~ +105°C
Contact Resistance: 10mΩ Max
Insulation Resistance: 1000MΩ Min
Withstanding Voltage: 1500V AC/minute
Pin Material: Brass/Tin over Nickel
Material: Nylon 66,UL94V-2(Black)

REV	DESCRIPTION	DATE
A2	CHANGE THE DRAWING	2022.03.08
A1	CHANGE THE INFORMATION	2019.10.28
A0	NEW RELEASE	2012.11.14

CJTconn CHANGJIANG CONNECTORS CO.,LTD.

Unit	Scale	Sheet
mm	3:1	1 of 1

Draw By: Diankui Wan
Approved : Jack Yin

General Tolerance
x.x±0.25
x.xx±0.20
x.xxx±0.15

PROJECT

Title :
4.20mm PITCH
180° DUAL ROW WAFER
- SPECIAL TYPE

DRAW NO : C4201WV-2x3P-B
REV A2