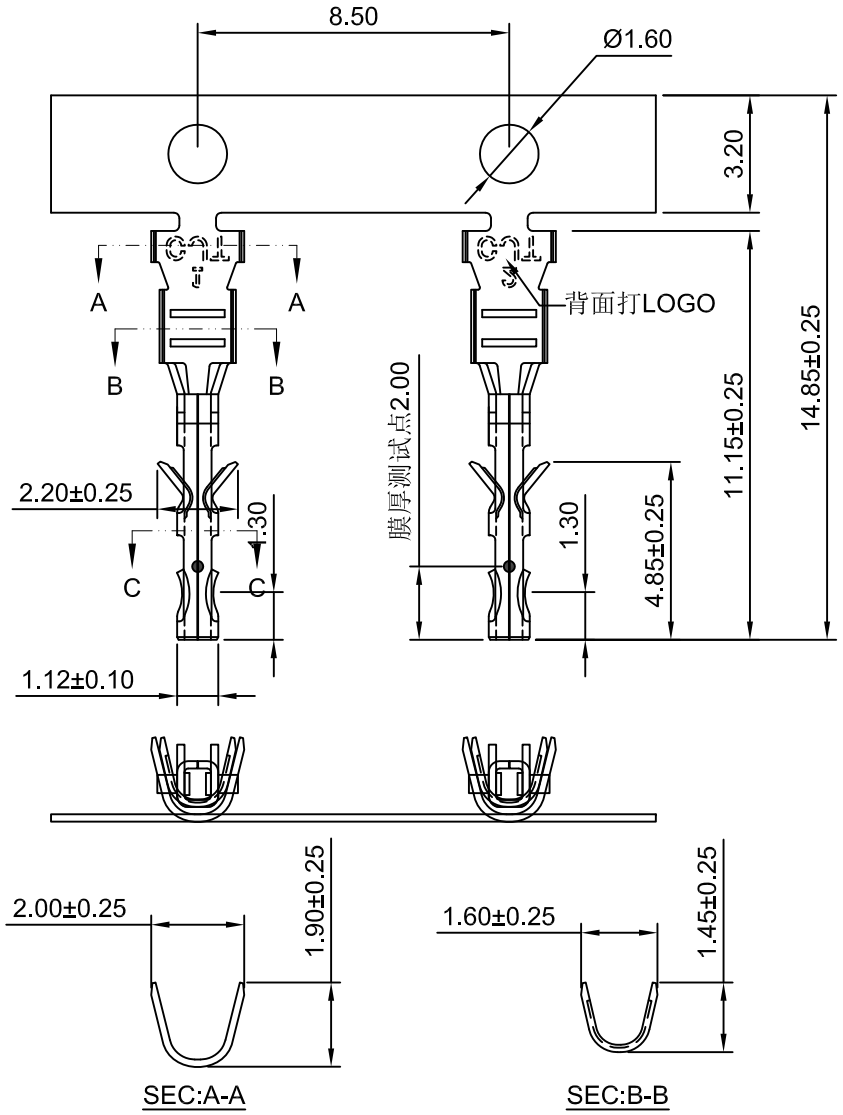

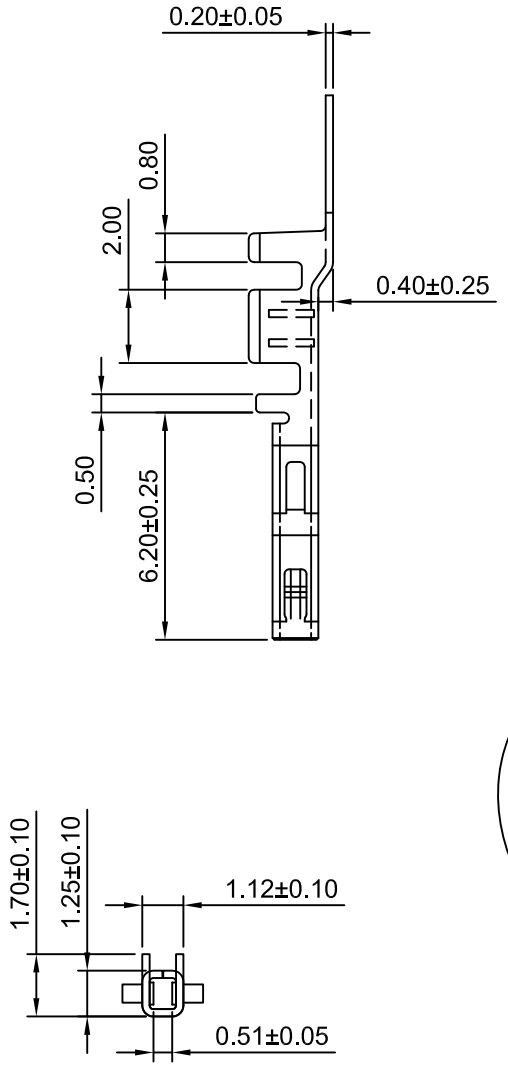

Ordering Information:

C3030F-GP-D-L - ***

1 2

1.Part NO.

2.Finish:

(Blank): Gold over Nickel (Au:1u")

G10: Gold over Nickel (Au:10u"Mating area)

G15: Gold over Nickel (Au:15u"Mating area)

G30: Gold over Nickel (Au:30u"Mating area)

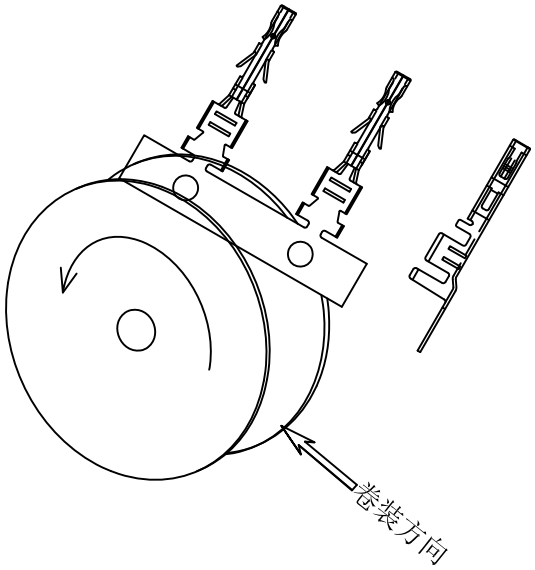

Ordering information & Specifications

Unit:mm

Part NO.	Wire Range	Insultion O.D.	Material	Finish	Qty/reel
C3030F-TP-D-L	AWG#26-#30	1.27mm(max)	Phosphor Bronze	Tin over Nickel	10,000 PCS
C3030F-GP-D-L	AWG#26-#30	1.27mm(max)	Phosphor Bronze	Gold over Nickel	10,000 PCS

REV	DESCRIPTION	DATE
A3	JL-GC-ECN00306	2024.06.27
A2	CHANGE THE DRAWING	2023.03.28
A1	MODIFY DRAWING	2022.12.23
A0	NEW RELEASE	2020.05.10

CJTconn CHANGJIANG CONNECTORS CO.,LTD.

Unit	Scale	Sheet
mm	5:1	1 of 1
DRWN Chengbiao Ye	CHK'D Diankui Wan	APPR Jack Yin

General Tolerances: x.x±0.25, x.xx±0.20, x.xxx±0.15, ANGLES ±1°

THIRD ANGLE PROJECTION

TITLE: 3.00mm PITCH CRIMP TERMINAL

DRAWING NO. C3030F-T-D-L

REV A3