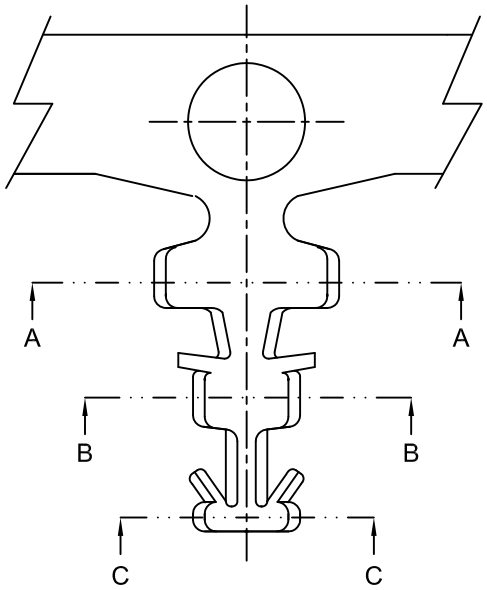

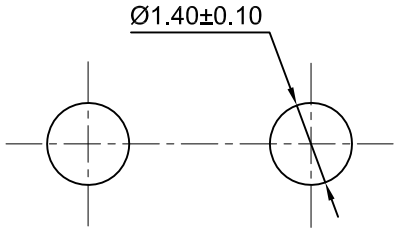

P.C.B LAYOUT

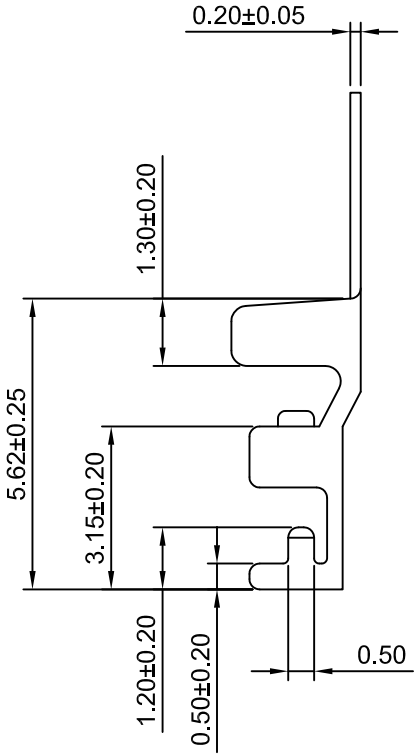

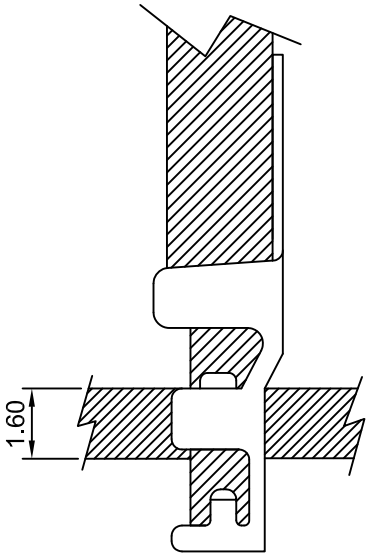

Assembly Layout

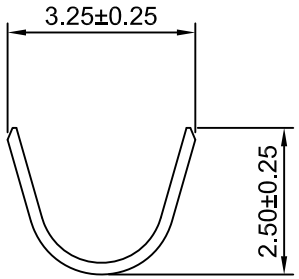

SEC: A-A

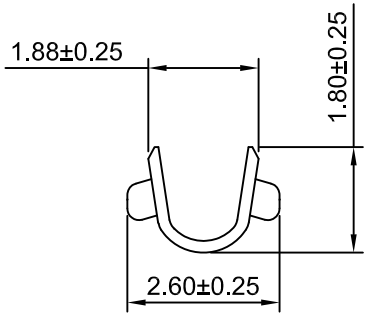

SEC: B-B

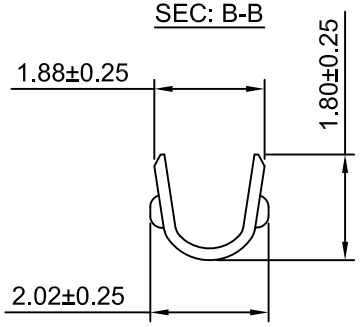

SEC: C-C

Ordering information & Specifications

Unit:mm

Part NO.	Wire Range	Insultion O.D.	Material	Finish	PCB Thickness	PCB Hole Diameter	Qty/reel
B1801-TP-C	AWG#22-#26	1.95mm(max)	Phosphor Bronze	Tin over Nickel	1.60mm(Max)	1.40mm	7,000 PCS
B1801-GP-C	AWG#22-#26	1.95mm(max)	Phosphor Bronze	Gold over Nickel	1.60mm(Max)	1.40mm	7,000 PCS

REV	DESCRIPTION	DATE
A1	CHANGE THE DRAWING	2023.02.09
A0	NEW RELEASE	2017.05.12

CJTconn CHANGJIANG CONNECTORS CO.,LTD.

Unit	Scale	Sheet
mm	8:1	1 of 1
DRAWN Haisen Li	CHK'D Diankui Wan	APPR Jack Yin

General Tolerances
x.x±0.25
x.xx±0.20
x.xxx±0.15
ANGLES ±1°

THIRD ANGLE PROJECTION

TITLE
ϕ1.80mm HOLE
CRIMP TERMINAL

DRAWING NO.
B1801-T-C

REV
A1