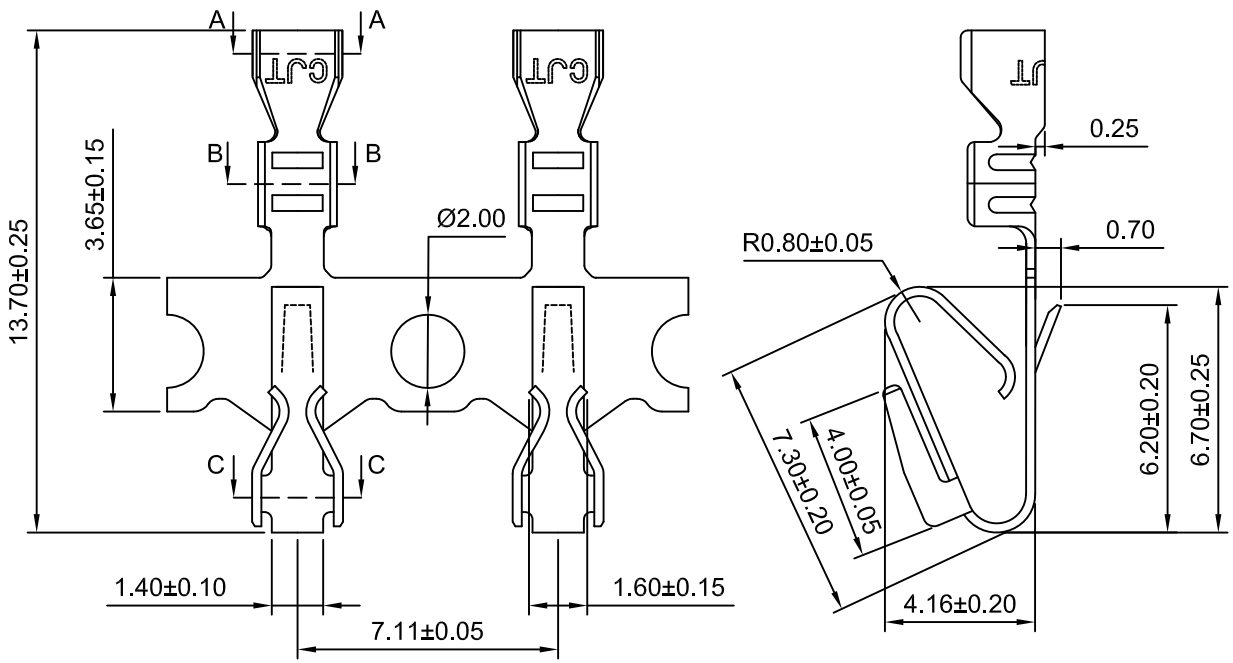

Ordering Information:

A3961 - *** -B-L- ***
1 2 3

1.Part NO.

2.Material:

GB: Brass

GP: Phosphor Bronze

3.Finish:

(Blank): Gold over Nickel (Au:1μin[0.03μm] Min)

G15: Gold over Nickel (Au:15μin[0.38μm] Min,Mating Area)

G30: Gold over Nickel (Au:30μin[0.76μm] Min,Mating Area)

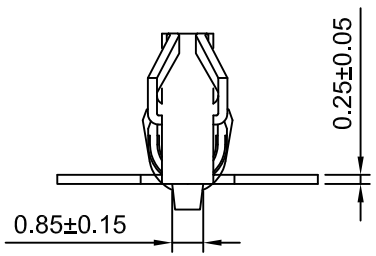

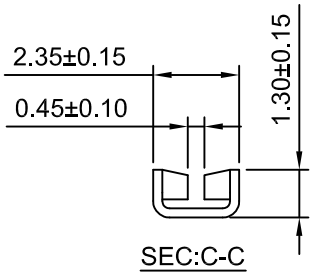

SEC:C-C

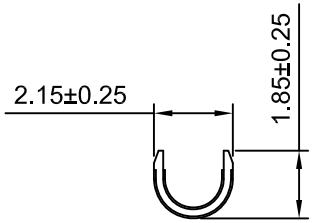

SEC:B-B

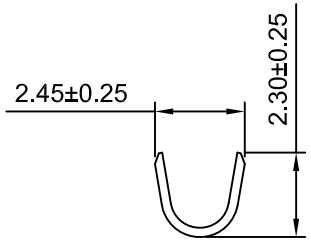

SEC:A-A

Ordering information & Specifications

Unit:mm

Part NO.	Wire Range	Insultion O.D.	Material	Finish
A3961-TB-B-L	AWG#22-#26	1.65mm(max)	Brass	Tin over Nickel
A3961-TP-B-L	AWG#22-#26	1.65mm(max)	Phosphor Bronze	Tin over Nickel
A3961-GB-B-L	AWG#22-#26	1.65mm(max)	Brass	Gold over Nickel
A3961-GP-B-L	AWG#22-#26	1.65mm(max)	Phosphor Bronze	Gold over Nickel

REV	DESCRIPTION	DATE
A0	NEW RELEASE	2022.12.21

CJTconn CHANGJIANG CONNECTORS CO.,LTD.

Unit	Scale	Sheet
mm	5:1	1 of 2
DRAWN	CHK'D	APPR
Haisen Li	Diankui Wan	Jack Yin

General Tolerances
x.x±0.25
x.xx±0.20
x.xxx±0.15
ANGLES ±1°

THIRD ANGLE PROJECTION

TITLE

3.96mm PITCH
CRIMP TERMINAL

DRAWING NO.

A3961-T-B-L

REV A0