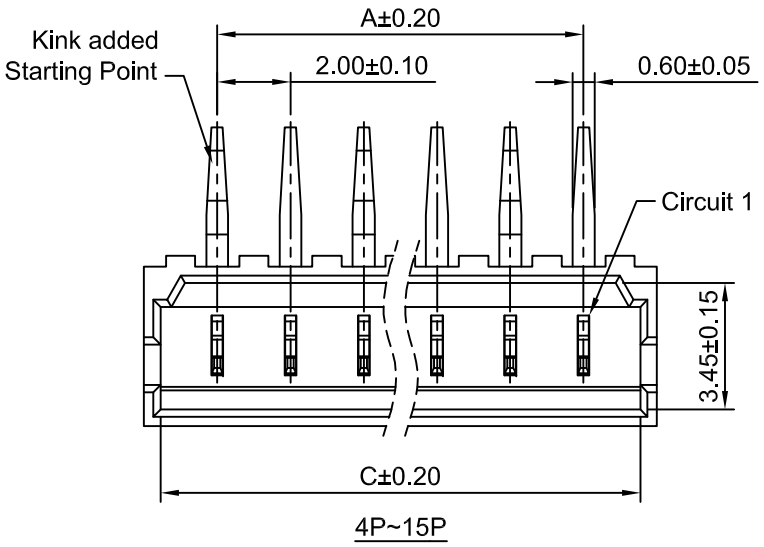

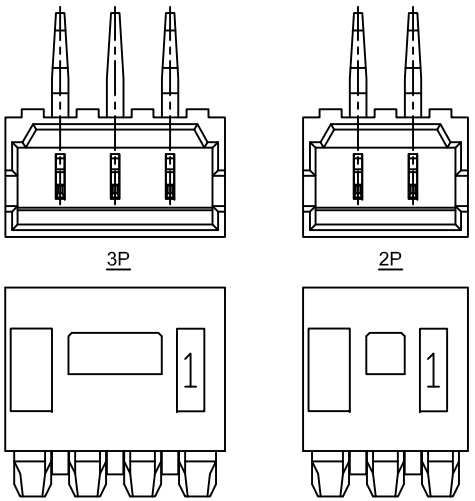

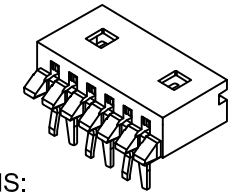

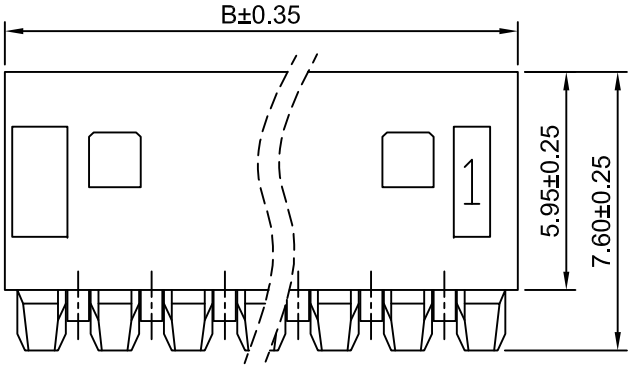

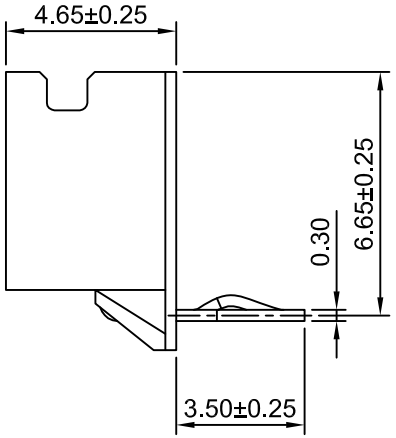

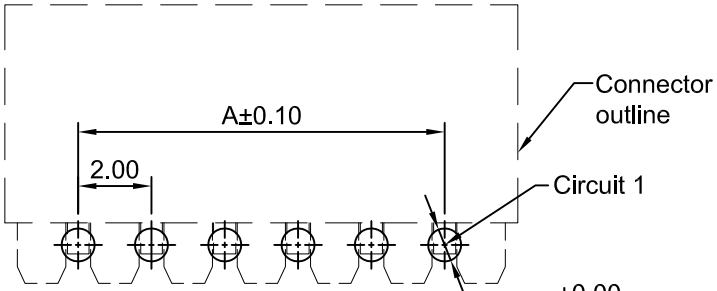

P.C.B LAYOUT
TOLERANCE:±0.05

SPECIFICATIONS:

Current Rating: 2A AC,DC
Voltage Rating: 125V AC,DC
Temperature Range: -40°C ~ +105°C
Contact Resistance: 20mΩ Max.
Insulation Resistance: 1000MΩ Min.
Withstanding Voltage: 800V AC/minute
Pin Material: Phosphor Bronze/Tin over Nickel
Material: Nylon 66,UL94V-0(Ivory)

Ordering Information & Dimensions

Circuits	Dimensions(mm)		
	A	B	C
A2004WR-2P	2.00	6.00	5.10
A2004WR-3P	4.00	8.00	7.10
A2004WR-4P	6.00	10.00	9.10
A2004WR-5P	8.00	12.00	11.10
A2004WR-6P	10.00	14.00	13.10
A2004WR-7P	12.00	16.00	15.10
A2004WR-8P	14.00	18.00	17.10
A2004WR-9P	16.00	20.00	19.10
A2004WR-10P	18.00	22.00	21.10
A2004WR-11P	20.00	24.00	23.10
A2004WR-12P	22.00	26.00	25.10
A2004WR-13P	24.00	28.00	27.10
A2004WR-14P	26.00	30.00	29.10
A2004WR-15P	28.00	32.00	31.10

REV	DESCRIPTION	DATE
A2	CHANGE THE DRAWING	2023.04.11
A1	CHANGE THE DRAWING	2022.01.10
A0	NEW RELEASE	2005.05.10

CJTconn CHANGJIANG CONNECTORS CO.,LTD.

Unit	Scale	Sheet
mm	5:1	1 of 1
DRAWN	CHK'D	APPR
Chengblao Ye	Dlankul Wan	Jack Yin

General Tolerances
x.x±0.25
x.xx±0.20
x.xxx±0.15
ANGLES ±1°

THIRD ANGLE PROJECTION

TITLE
2.00mm PITCH
RIGHT-ANGLE WAFER

DRAWING NO.
A2004WR-XP

REV
A2